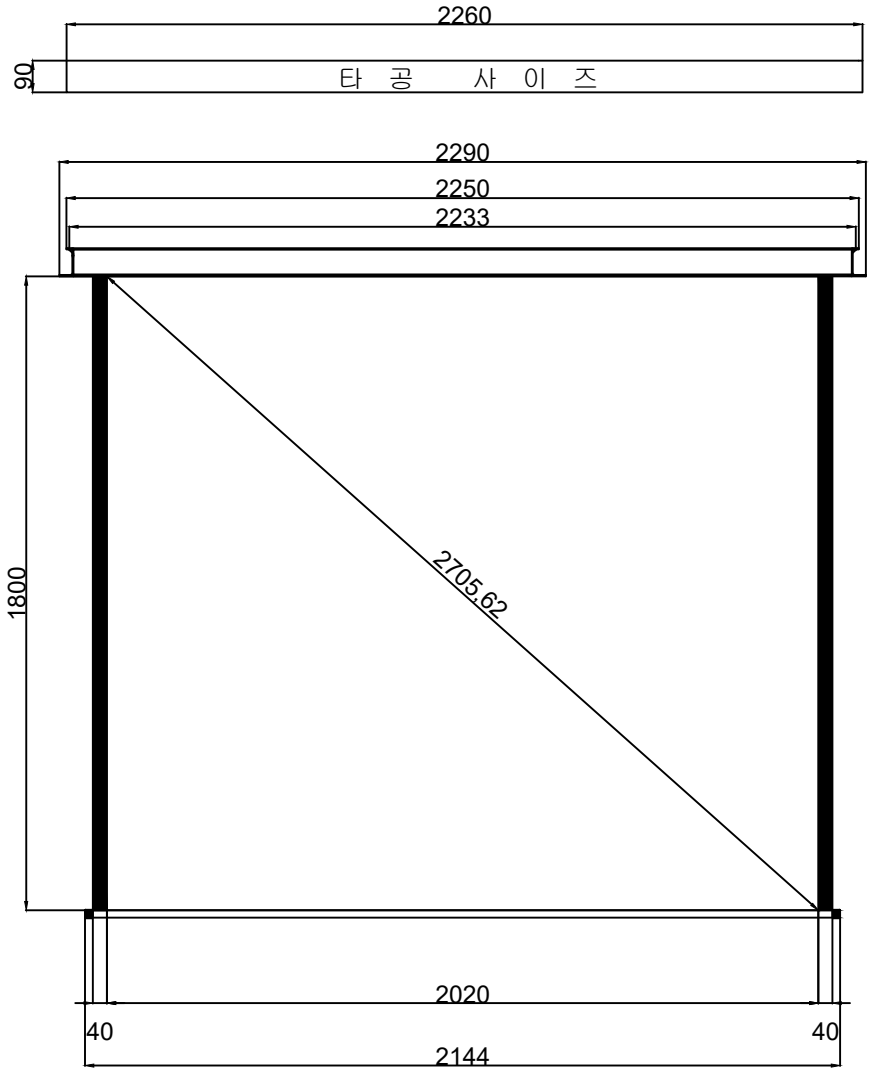

Front View

R-EV100

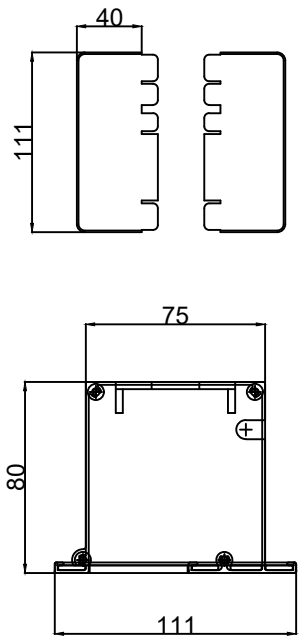

Side View

Yuncine Co., Ltd.