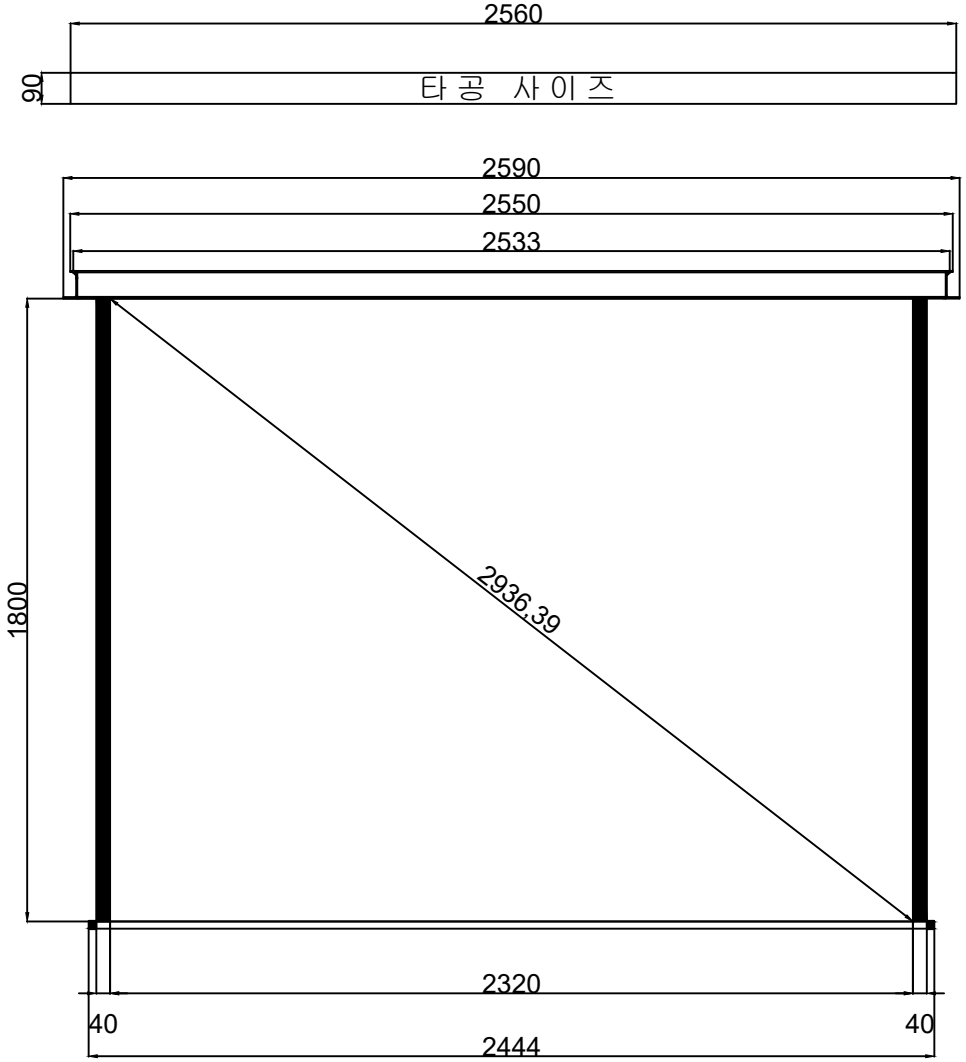

Front View

R-EV120

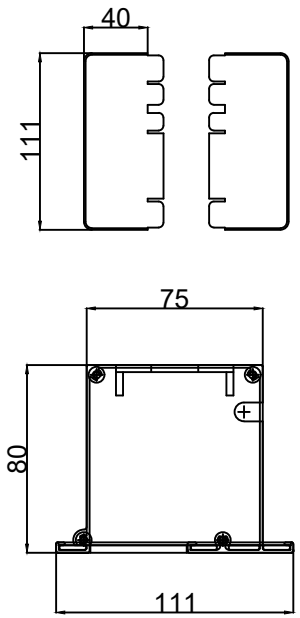

Side View

Yuncine Co., Ltd.